Pressures: 2100 kPa CWP
Steam: 1400 kPa @ 200°C

Standards: Dezincification Resistant
BS 5154 – 1991: Globe Stop & Check Valves
AS 3855: Materials suitable for Potable Water Service

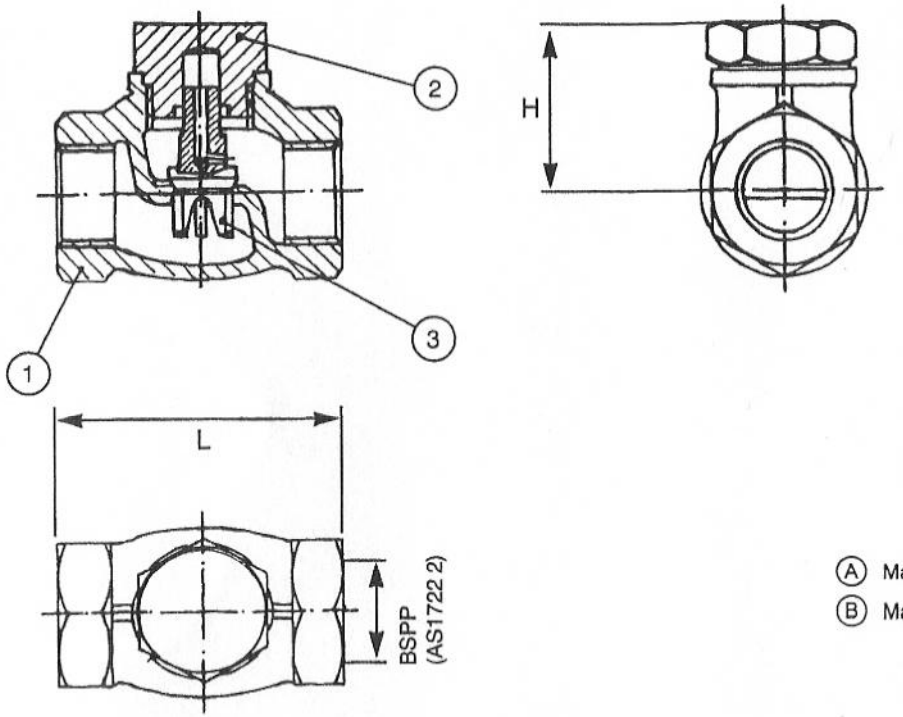

Ⓐ Material sizes 15mm ~ 20mm
Ⓑ Material sizes 32mm ~ 50mm

ITEM	DESCRIPTION	MAT'L	STANDARD
3	DISC – PISTON Ⓐ	DR BRASS	AS1567 -352
3	DISC – PISTON Ⓑ	GUNMETAL BRONZE	AS1565 C83600M
2	CAP – BONNET Ⓐ	DR BRASS	AS1567 -352
2	CAP – BONNET Ⓑ	GUNMETAL BRONZE	AS1565 C83600M
1	BODY	GUNMETAL BRONZE	AS1565 C83600M

Dimensions

Size mm	8	10	15	20	25	32	40	50	65	80	100
L	•	•	56	59	73	87	92	114			•
H	•	•	30	38	51	62	54	82			•
D	•	•	•	•	•	•	•	•	•	•	•
Wt/kgs	•	•	*0.25*	*0.4*	*0.7*	*1.2*	*1.4*	*2.8*			•

PVA **PROMET** VALVES AUSTRALIA
1A Green Road Woodville West SA 5011
www.prometvalves.com promet@prometvalves.com
T: 08 8268 1777 ABN 47096 425 697 F: 08 8268 1711

FIG No
T4M

BRONZE LIFT CHECK VALVE SCREWED

CLASS 21
PN 20